M03

Spindle in min. position

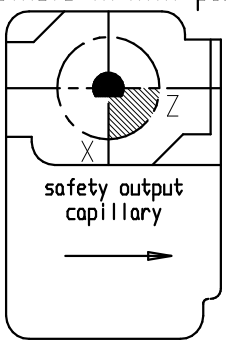


| | Angular Pos / BB | Regulation °C | Diff. °C |
|---|---|---|---|
| X | 0 | ≃ 0 | |
| Y | | | |
| Z | 270 | 70 ± 4 | Approx 4 |
| SAFETY | | | |
| Temp.(°C): | | 95 ± 7 °C | |

| | REGULATION | | SAFETY | |
|---|---|---|---|---|
| Bulb | St/St | COPPER | St/St | COPPER |
| Capillary | St/St | COPPER | St/St | COPPER |
| Length Stem | 740 ±25mm | | 700 ±25mm | |
| Sleeving | 596 ±25 mm | | 590 ±25mm | |
| | PEr | Silicone | PEr | TPE |
| Maxi bulb temp. | 118 °C | | 150 °C | |
| Standard packaging | | | | |
| Terminals | | | | |
| 1 / 2 | AMP 90° 6.3 X 0.8 | | A / B | AMP 90° 6.3 X 0.8 |

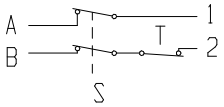


Preset in position : Z

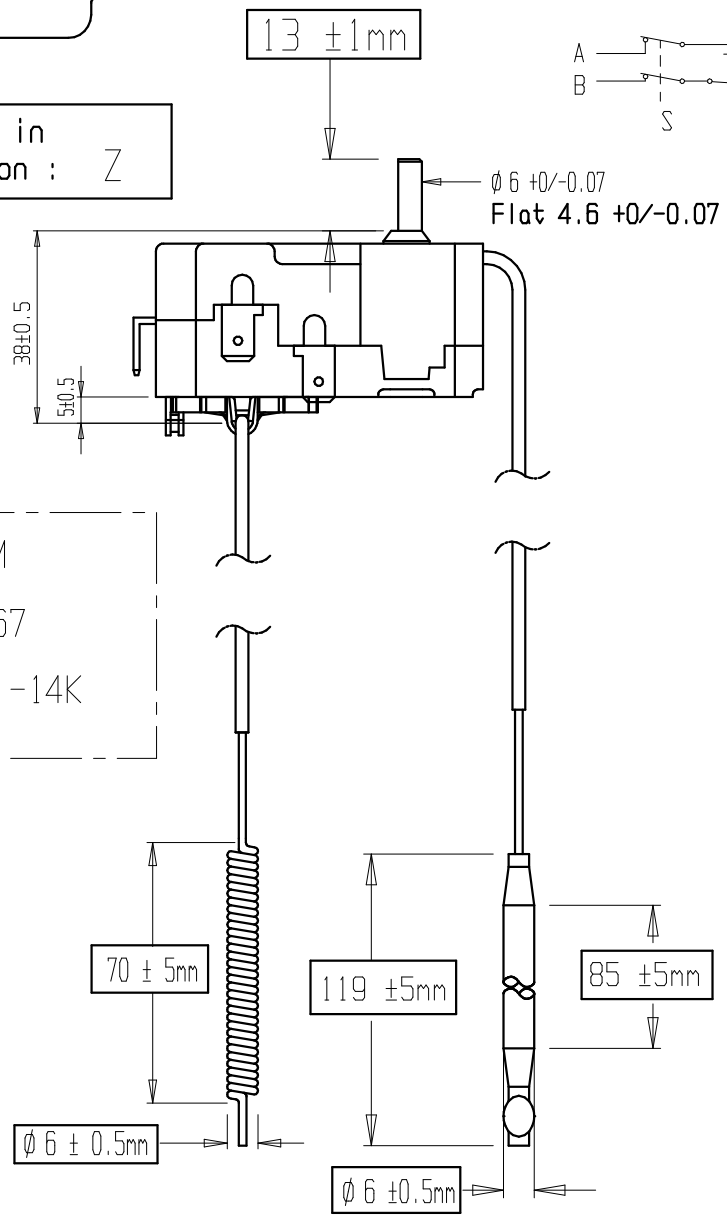


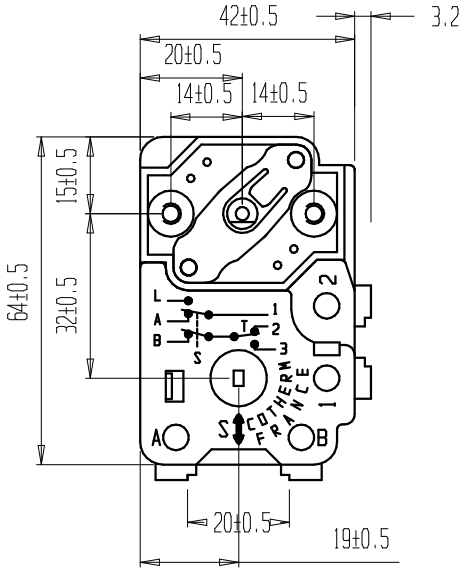


Marking

COTHERM
BBSC0067
S102°C -14K

Comments :

NORMS: -Approvals DEMKO:EN60730-1
EN60730-2-9
T 110
1-2 20A 240V ∼
1-2 16A 400V ∼

| | | | | | |
|---|---|---|---|---|---|
| c | Modification capillary length safety and regulation | 13/11/06 | D.M | 14/11/06 | G T |
| REFER. | MODIFICATION N°: M06284 | DATE | VISA | ACCEPTED ON | VISA |

| | | | |
|---|---|---|---|
| G.T.: ± | SAMPLE N°: | DESIGNATION BBSC 0/70°C Safety 95°C | COTHERM |
| Scale : 2/3 | | | |
| Drawed on : 03/10/01 | by : D A | | BBSC0067 |
| Approved on : 03/10/01 | by : B R | | |

THIS DRAWING IS THE EXCLUSIVE PROPERTY OF COTHERM COMPANY AND MUST NOT BE COPIED OR TRANSMITTED TO THIRD PARTIES