	Angular Pos / BB	Regulation °C	Diff. °C
X	0	≃ 30	
Y			
Z	270	90 ±3	Approx 3
Submerged cap. length = 50 mm			

Terminals	6.3 x 0.8 mm
Bulb	St/St COPPER
Capillary	St/St COPPER
Capil. length	1500 ±25 mm
No of spirals	Standard
Of diameter	20/25 mm
Sleeving	Silicone PEr
Maxi bulb temp.	134°C
Preset in position : Z	
Comments :	

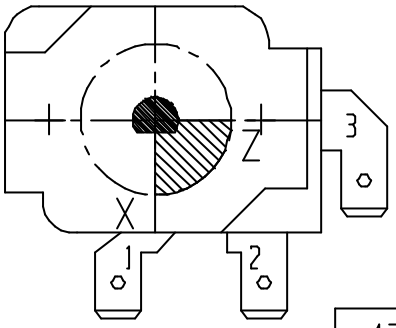

Spindle in min. position

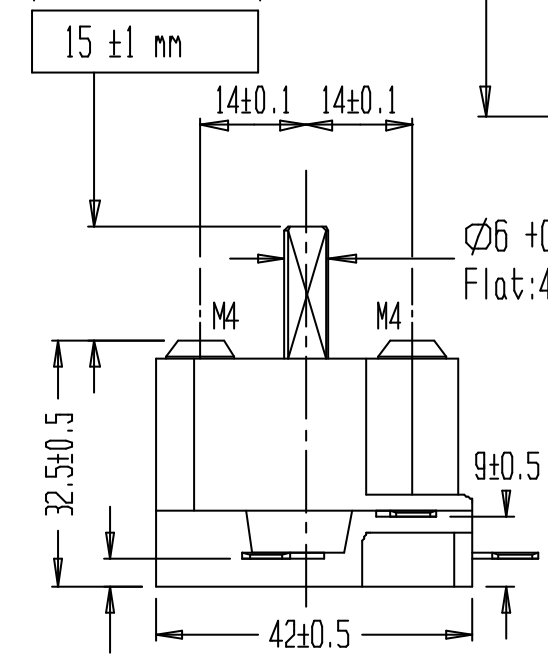

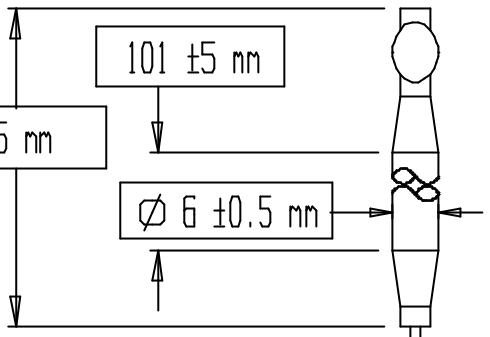

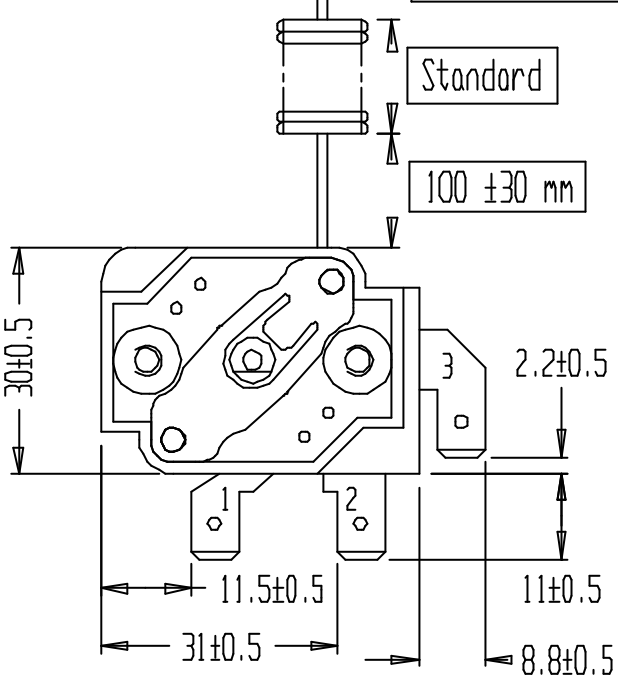

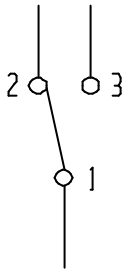

Marking

COTHERM
.... GTLH3063
1-2 AC 2DA 240V
1-3 AC 5A 240V

NORMS: -Approvals BEAB:EN60730-1
EN60730-2-9
T 100
1-2 20A 250V ∿
1-3 5A 250V ∿

a	updating	06/01/97	D A	07/01/97	B R
REFER.	MODIFICATION N°: 96203	DATE	VISA	ACCEPTED ON	VISA

G.T.: ±	SAMPLE	DESIGNATION	COTHERM
Scale : /	N°:	GTLH3 30 / 90 °C	
Drawed on : 13/09/94	by : Y.C	CUSTOMER	GTLH3063
Approved on : 13/09/94	by : B R	STANDARD	

THIS DRAWING IS THE EXCLUSIVE PROPERTY OF COTHERM COMPANY AND MUST NOT BE COPIED OR TRANSMITTED TO THIRD PARTIES